F 013 137 100

Stand ~~98-09~~
Issue 99-01-22

Fig./Abb. 1

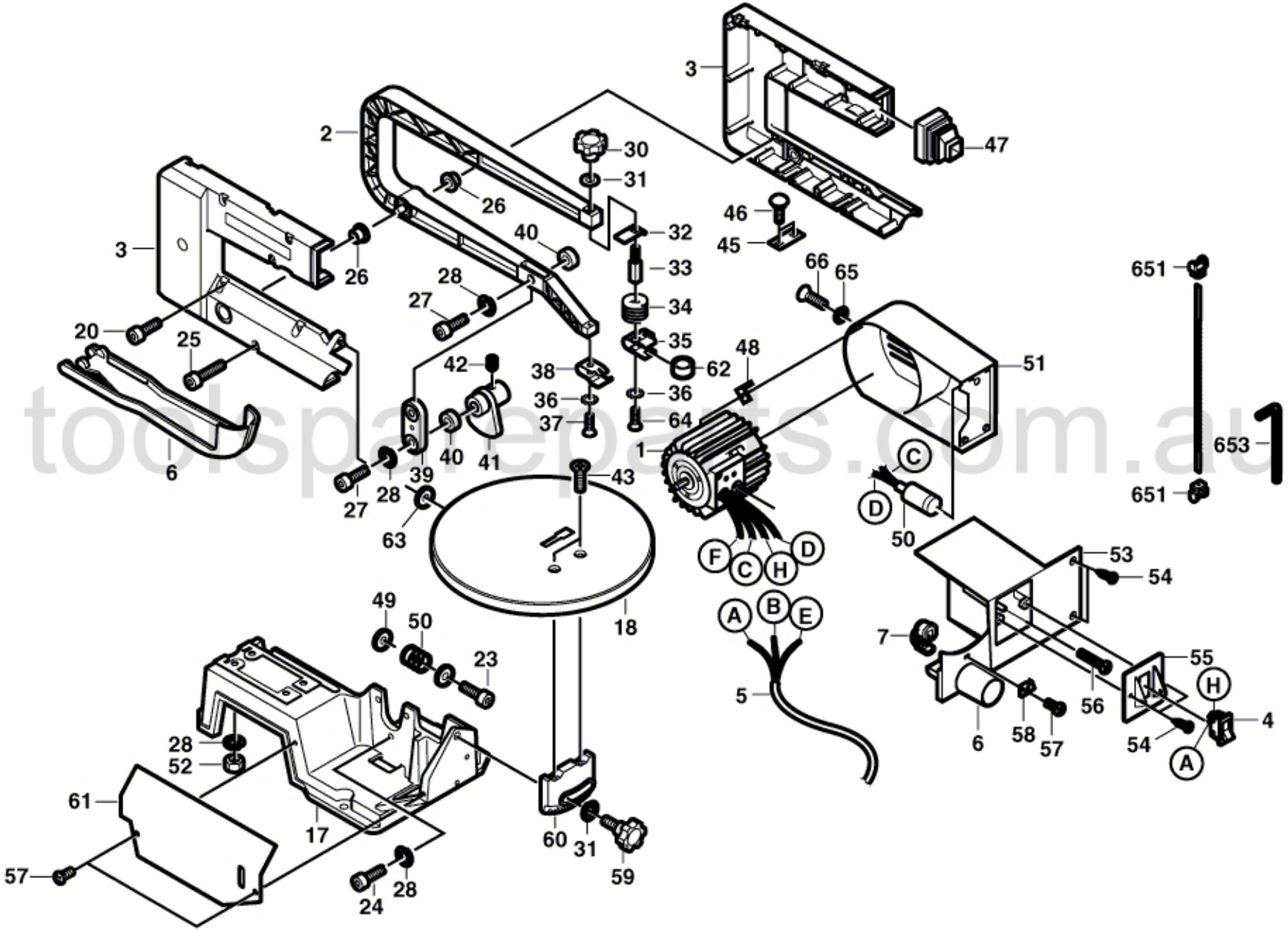

toolspareparts.com.au